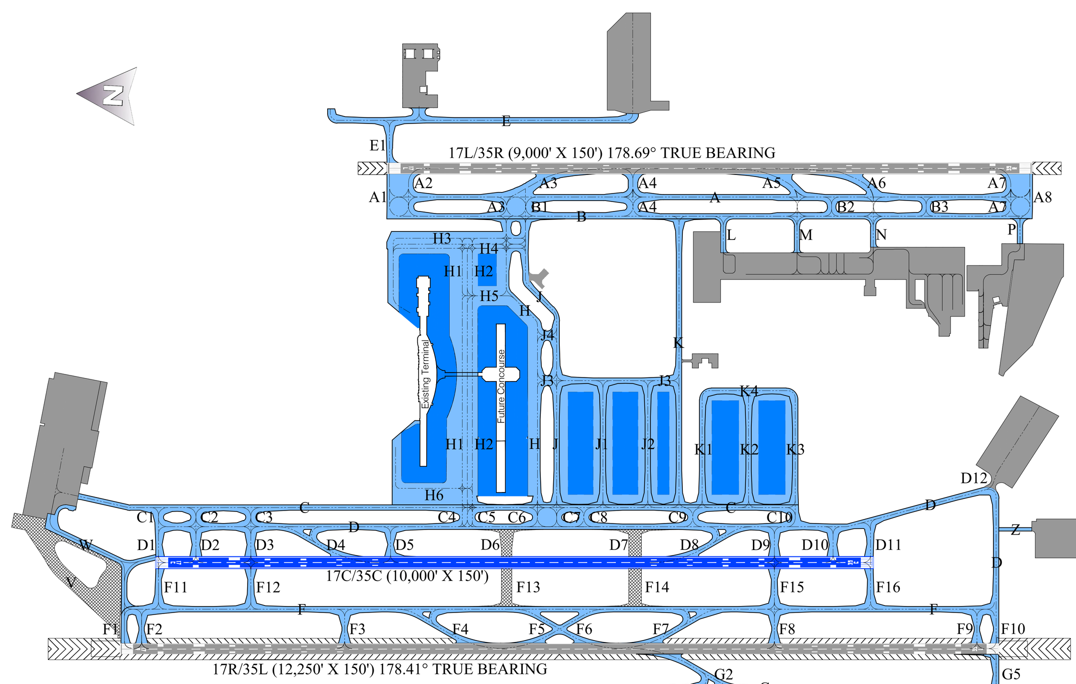

ALL TAXIWAYS AND TAXILANES ARE IDENTIFIED IN THE TABLE BELOW

TAXIWAY/TAXILANE KEY MAP
N.T.S.

DRAWING LEGEND

ITEM	EXISTING	FUTURE
PACS & SACS		N/A
LOC		
NAVAIDS		
RVR		
PAPI		N/A
GLIDE SLOPE ANTENNA		
WIND SOCK		N/A
ROTATING BEACON		
DISTANCE MEASURING EQUIPMENT		N/A
PART 77 INNER APPROACH		
TERPS		N/A
AIRPORT PROPERTY LINE		
POFZ		N/A
ROFA		
RSA		
ROFZ		N/A
RPZ		N/A
TSS		N/A
TOFA		
TSA		
NAVAID CRITICAL AREA		
BRL		
SECURITY FENCE		
AIRPORT REFERENCE POINT (SEE NOTE BELOW)		
LANDFILL		N/A
TREELINE		N/A
100 YEAR FLOODPLAIN		N/A
STREAMS (COA)		N/A
STORM DRAINAGE & WATER		N/A
		PH1 PH2 PH3 PH4 U*
BUILDINGS		
APRON/AIRFIELD		
DEVELOPMENT AREA	N/A	
ROADWAY PAVEMENT		N/A
DEMOLISH	N/A	
PERSONAL RAPID TRANSIT (P.R.T.) (PH 3/PH 4)	N/A	
S.H. 71 RELOCATION (U*)	N/A	
HIGH CAPACITY TRANSIT ALTERNATE 1 (U*)	N/A	
HIGH CAPACITY TRANSIT ALTERNATE 2 (U*)	N/A	
ROADWAY (U*)	N/A	
RUNWAY 17C/35C (U*)	N/A	

* U - POST 20 YEAR DEVELOPMENT

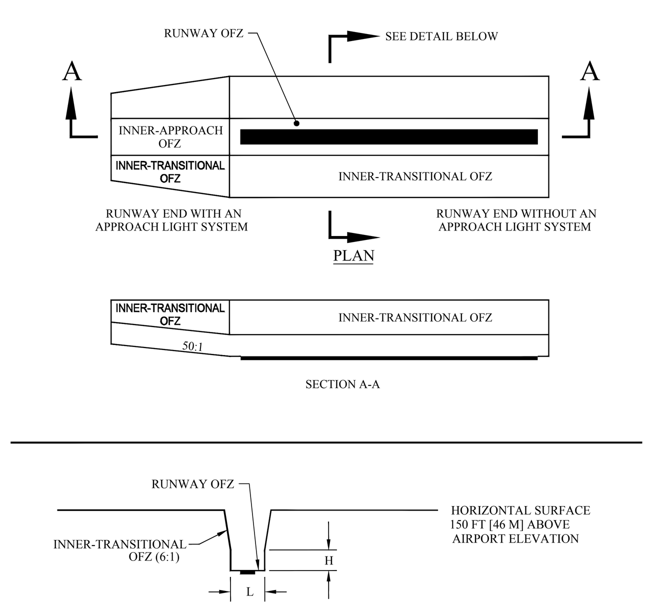

CAT I (ADG V)				
RWY END	RWY END ELEV.	HORZ. SURF. ELEV.	H	L
35R	473.6	691.5	39.46	400'

CAT I (ADG VI)				
RWY END	RWY END ELEV.	HORZ. SURF. ELEV.	H	L
17R	541.5	691.5	34.75	400'
35L	487.3	691.5	34.91	400'

RUNWAYS SERVING LARGE AIRPLANES WITH CATEGORY I APPROACH MINIMUMS

DETAIL OF CATEGORY I OBJECT FREE ZONE (OFZ)

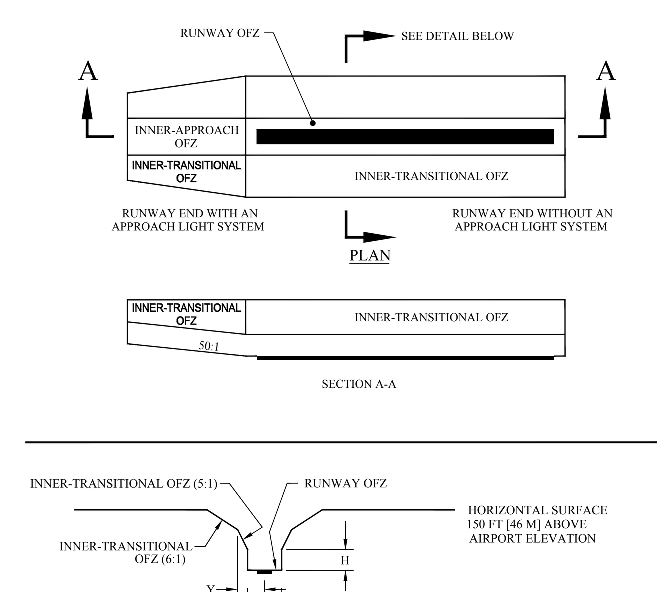

CAT 3 (ADG V)					
RWY END	RWY END ELEV.	HORZ. SURF. ELEV.	H	L	Y
17L	491.6	691.5	24.10	400'	659.32
35R	473.6	691.5	24.14	400'	659.75
17C	532.0	691.5	24.01	400'	658.35
35C	492.0	691.5	24.10	400'	659.31
17R	541.5	691.5	23.99	400'	658.12
35L	487.3	691.5	24.11	400'	659.42

RUNWAYS SERVING LARGE AIRPLANES WITH CATEGORY II AND III APPROACH MINIMUMS

DETAIL OF CATEGORY III OBJECT FREE ZONE (OFZ)

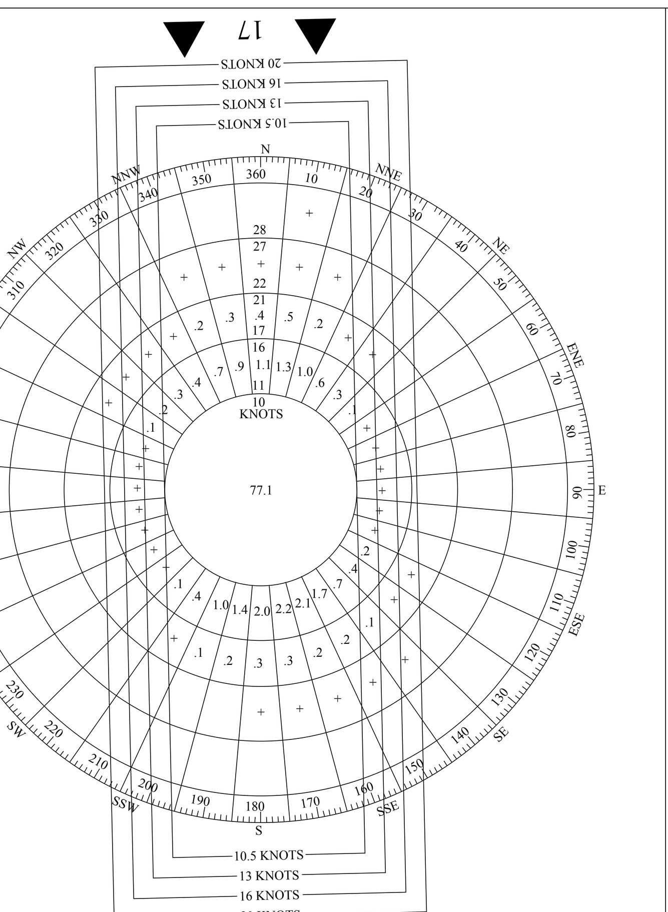

ALL-WEATHER WIND ROSE

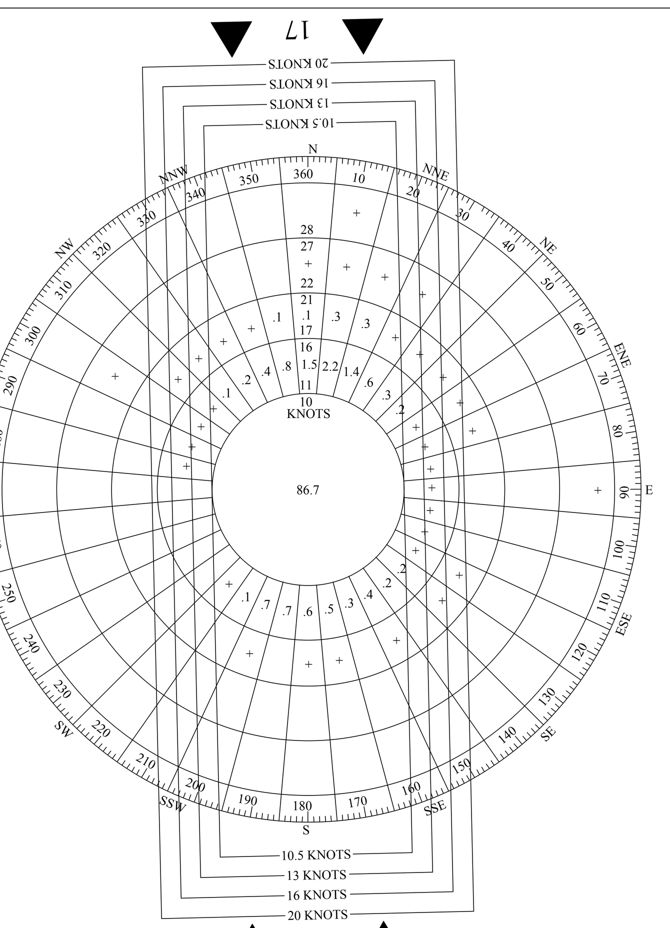

IFR WIND ROSE

WIND COVERAGE TABLE

WEATHER CATEGORIES	RUNWAY 17 [%]				RUNWAY 35 [%]				TOTAL COMBINED [%]			
	10.5 KNOTS	13 KNOTS	16 KNOTS	20 KNOTS	10.5 KNOTS	13 KNOTS	16 KNOTS	20 KNOTS	10.5 KNOTS	13 KNOTS	16 KNOTS	20 KNOTS
ALL WEATHER	80.78	81.31	81.43	81.46	65.42	65.93	66.10	66.15	98.92	99.71	99.93	99.99
VMC	81.22	81.77	81.89	81.92	64.18	64.71	64.88	64.93	98.89	99.71	99.94	99.99
IMC	75.60	75.86	75.95	75.98	80.14	80.44	80.58	80.67	99.30	99.70	99.87	99.97
CAT I	73.53	73.80	73.89	73.92	79.23	79.55	79.71	79.78	99.27	99.69	99.87	99.96
CAT II	93.22	93.35	93.48	93.48	87.10	87.10	87.10	87.23	99.60	99.73	99.87	100.00
CAT III	96.25	96.50	96.50	96.50	90.75	91.00	91.00	91.25	99.50	99.75	99.75	100.00
CAT IIIa	97.14	97.14	97.14	97.14	100.00	100.00	100.00	100.00	100.00	100.00	100.00	100.00
CAT IIIb	97.87	97.87	97.87	97.87	92.02	92.02	92.02	92.02	100.00	100.00	100.00	100.00
CAT IIIc	94.35	94.92	94.92	94.92	87.57	88.14	88.14	88.70	98.87	99.44	99.44	100.00

NOTES:
TOTAL COMBINED COLUMN HAS AT LEAST ONE RUNWAY AVAILABLE.
COVERAGE BASE ON CRITERIA DEFINED IN ADVISORY CIRCULAR 150/5300-13A "AIRPORT DESIGN" (CHANGE 9)
SOURCES: NATIONAL CLIMATIC DATA CENTER (NCDC), STATION WBAN 13904, DATA RECORDED AT AUSTIN BERGSTROM INTERNATIONAL AIRPORT (AUS) AND LANDRUM & BROWN ANALYSIS.
OBSERVATION PERIOD: 01/01/2000 - 12/31/2016

PROPOSED TAXIWAY/TAXILANE DATA

NAME: EXISTING	NAME: FUTURE	WIDTH: TAXIWAY	WIDTH: SHOULDER	WIDTH: TESM	WIDTH: TSA	WIDTH: OFA	OBJECTS INSIDE TSA AND TOFA	SEPARATION BETWEEN: TWY/TL CL TO FIXED/ MOVABLE OBJECT	SEPARATION BETWEEN: TWY/TWY AND TL/TL	TAXIWAY/TAXILANE LIGHTING
TWY A (1)	TWY A	75'	12'	15'	214'	320'	N/A	160'	267'	HITL, CENTER & EDGE
TWY B	TWY A1	108'	12'	15'	214'	320'	N/A	160'	267'	HITL, CENTER & EDGE
TWY F	TWY A2	135'	12'	15'	214'	320'	N/A	160'	267'	HITL, CENTER & EDGE
TWY G *	TWY A3	142'	12'	15'	214'	320'	N/A	160'	267'	HITL, CENTER & EDGE
TWY J	TWY A4	135'	12'	15'	214'	320'	N/A	160'	1495'	HITL, CENTER & EDGE
TWY K **	TWY A5	145'	12'	15'	214'	320'	N/A	160'	1061'	HITL, CENTER & EDGE
TWY L **	TWY A6	132'	12'	15'	214'	320'	N/A	160'	1061'	HITL, CENTER & EDGE
TWY M	TWY A7	138'	12'	15'	214'	320'	N/A	160'	267'	HITL, CENTER & EDGE
TWY B	TWY A8	110'	12'	15'	214'	320'	N/A	160'	267'	HITL, CENTER & EDGE
TWY B	TWY B	75'	12'	15'	214'	320'	N/A	160'	267'	HITL, CENTER & EDGE
TWY H	TWY B1	143'	12'	15'	214'	320'	N/A	160'	267'	HITL, CENTER & EDGE
N/A	TWY B2	120'	0'	15'	214'	320'	N/A	160'	1317'	HITL, CENTER & EDGE
N/A	TWY B3	120'	0'	15'	214'	320'	N/A	160'	1174'	HITL, CENTER & EDGE
TWY C **	TWY C	75'	30'	15'	214'	320'	N/A	160'	267'	HITL, CENTER & EDGE
N/A	TWY C1	139'	30'	15'	214'	320'	N/A	160'	523'	HITL, CENTER & EDGE
N/A	TWY C2	142'	30'	15'	214'	320'	N/A	160'	523'	HITL, CENTER & EDGE
N/A	TWY C3	142'	30'	15'	214'	320'	N/A	160'	764'	HITL, CENTER & EDGE
N/A	TWY C4	118'	N/A	15'	214'	320'	N/A	160'	140'	HITL, CENTER & EDGE
N/A	TWY C5	109'	N/A	15'	214'	320'	N/A	160'	140'	HITL, CENTER & EDGE
N/A	TWY C6	142'	0'	15'	214'	320'	N/A	193'	267'	HITL, CENTER & EDGE
N/A	TWY C7	142'	0'	15'	262'	386'	N/A	193'	267'	HITL, CENTER & EDGE
N/A	TWY C8	142'	0'	15'	262'	386'	N/A	160'	267'	HITL, CENTER & EDGE
N/A	TWY C9	142'	0'	15'	214'	320'	N/A	160'	1427'	HITL, CENTER & EDGE
N/A	TWY C10	155'	0'	15'	214'	320'	N/A	160'	1427'	HITL, CENTER & EDGE
TWY C **	TWY D	75'	0'	15'	262'	386'	N/A	193'	267'	HITL, CENTER & EDGE
N/A	TWY D1	90'	30'	15'	214'	320'	N/A	160'	523'	HITL, CENTER & EDGE
N/A	TWY D2	104'	30'	15'	214'	320'	N/A	160'	523'	HITL, CENTER & EDGE
N/A	TWY D3	104'	30'	15'	214'	320'	N/A	160'	383'	HITL, CENTER & EDGE
N/A	TWY D4	78'	30'	15'	214'	320'	N/A	160'	632'	HITL, CENTER & EDGE
N/A	TWY D5	77'	30'	15'	214'	320'	N/A	160'	632'	HITL, CENTER & EDGE
G *	TWY D6 *	75'	30'	15'	214'	320'	N/A	193'	1616'	HITL, CENTER & EDGE
T *	TWY D7 *	75'	30'	15'	214'	320'	N/A	160'	681'	HITL, CENTER & EDGE
N/A	TWY D8	78'	30'	15'	214'	320'	N/A	160'	331'	HITL, CENTER & EDGE
N/A	TWY D9	75'	30'	15'	262'	386'	N/A	160'	331'	HITL, CENTER & EDGE
N/A	TWY D10	104'	30'	15'	214'	320'	N/A	193'	523'	HITL, CENTER & EDGE
N/A	TWY D11	94'	30'	15'	214'	320'	N/A	160'	523'	HITL, CENTER & EDGE
N/A	TWY D12	75'	30'	15'	214'	320'	N/A	160'	N/A	HITL, CENTER & EDGE
N/A	TWY E	75'	30'	15'	214'	320'	N/A	160'	N/A	HITL, CENTER & EDGE
TWY E	TWY E1	78'	30'	15'	214'	320'	N/A	160'	N/A	HITL, CENTER & EDGE
N/A	TWY F	75'	30'	15'	214'	320'	N/A	160'	N/A	HITL, CENTER & EDGE
N/A	TWY F1	75'	30'	15'	214'	320'	N/A	160'	240'	HITL, CENTER & EDGE
N/A	TWY F2	75'	30'	15'	214'	320'	N/A	160'	240'	HITL, CENTER & EDGE
N/A	TWY F3	75'	30'	15'	214'	320'	N/A	160'	741'	HITL, CENTER & EDGE
N/A	TWY F4	78'	30'	15'	214'	320'	N/A	160'	741'	HITL, CENTER & EDGE
N/A	TWY F5	78'	30'	15'	214'	320'	N/A	160'	817'	HITL, CENTER & EDGE
N/A	TWY F6	78'	30'	15'	214'	320'	N/A	160'	817'	HITL, CENTER & EDGE
N/A	TWY F7	78'	30'	15'	214'	320'	N/A	160'	744'	HITL, CENTER & EDGE
N/A	TWY F8	75'	30'	15'	262'	386'	N/A	193'	744'	HITL, CENTER & EDGE
N/A	TWY F9	75'	30'	15'	214'	320'	N/A	160'	267'	HITL, CENTER & EDGE
N/A	TWY F10	75'	30'	15'	214'	320'	N/A	160'	267'	HITL, CENTER & EDGE
N/A	TWY F11	88'	30'	15'	214'	320'	N/A	160'	472'	HITL, CENTER & EDGE
N/A	TWY F12	82'	30'	15'	214'	320'	N/A	160'	1287'	HITL, CENTER & EDGE
G *	TWY F13 *	75'	30'	15'	214'	320'	N/A	160'	1791'	HITL, CENTER & EDGE
T *	TWY F14 *	82'	30'	15'	214'	320'	N/A	160'	1791'	HITL, CENTER & EDGE
N/A	TWY F15	82'	30'	15'	262'	386'	N/A	193'	1340'	HITL, CENTER & EDGE
N/A	TWY F16	82'	30'	15'	214'	320'	N/A	160'	1340'	HITL, CENTER & EDGE
N/A	TWY G	75'	30'	15'	214'	320'	N/A	160'	267'	HITL, CENTER & EDGE
N/A	TWY G1	142'	30'	15'	214'	320'	N/A	160'	351'	HITL, CENTER & EDGE
N/A	TWY G2	78'	30'	15'	214'	320'	N/A	160'	351'	HITL, CENTER & EDGE
N/A	TWY G3	142'	30'	15'	214'	320'	N/A	160'	1277'	HITL, CENTER & EDGE
N/A	TWY G4	160'	30'	15'	214'	320'	N/A	160'	1277'	HITL, CENTER & EDGE
N/A	TWY G5	78'	30'	15'	214'	320'	N/A	160'	1277'	HITL, CENTER & EDGE
TWY G **	TWY H	75'	30'	15'	214'	320'	N/A	160'	267'	HITL, CENTER & EDGE
N/A	TL H1	75'	N/A	15'	N/A	N/A	N/A	81'	140'	HITL, CENTER & EDGE
N/A	TL H2	75'	N/A	15'	N/A	N/A	N/A	81'	140'	HITL, CENTER & EDGE
OVERNIGHT EAST (G-III) TL	TL H3	72'	N/A	N/A	214'	320'	Fence	89'-133'	140'	N/A
N/A	TL H4	N/A	N/A	15'	214'	320'	N/A	160'	140'	HITL, CENTER & EDGE
N/A	TL H5	N/A	N/A	15'	214'	320'	N/A	160'	662'	HITL, CENTER & EDGE
OVERNIGHT WEST (G-III) TL **	TL H6	72'	N/A	N/A	214'	320'	Fence	106'-119'	267'	N/A
TWY H **	TWY J	75'	30'	15'	262'	386'	N/A	193'	267'	HITL, CENTER & EDGE
N/A	TL J1	75'	30'	15'	214'	320'	N/A	138'	646'	HITL, CENTER & EDGE
N/A	TL J2	75'	30'	15'	214'	320'	N/A	138'	436'	HITL, CENTER & EDGE
N/A	TL J3	75'	30'	15'	214'	320'	N/A	160'	631'	HITL, CENTER & EDGE
N/A	TWY J4	75'	30'	15'	214'	320'	N/A	160'	631'	HITL, CENTER & EDGE
N/A	TWY K	75'	30'	15'	214'	320'	N/A	160'	320'	HITL, CENTER & EDGE
N/A	TL K1	75'	30'	15'	214'	320'	N/A	138'	320'	HITL, CENTER & EDGE
N/A	TL K2	75'	30'	15'	214'	320'	N/A	138'	648'	HITL, CENTER & EDGE
N/A	TL K3	75'	30'	15'	214'	320'	N/A	138'	648'	HITL, CENTER & EDGE
N/A	TL K4	75'	30'	15'	214'	320'	N/A	138'	1630'	HITL, CENTER & EDGE
TWY N	TWY L	75'	30'	15'	214'	320'	N/A	160'	612'	HITL, CENTER & EDGE
TWY K **	TWY M	75'	30'	15'	214'	320'	N/A	160'	1026'	HITL, CENTER & EDGE
TWY L **	TWY N	75'	12'	15'	214'	320'	N/A	160'	1060'	HITL, CENTER & EDGE
TWY P	TWY P	75'	30'	15'	214'	320'	N/A	160'	2052'	HITL, CENTER & EDGE
TWY V *	N/A	N/A	N/A	N/A	N/A	N/A	N/A	160'	N/A	HITL, CENTER & EDGE
TWY W **	TWY W	75'	30'	15'	214'	320'	N/A	160'	513'	HITL, CENTER & EDGE
TWY Z	TWY Z	47'	25'	15'	214'	320'	N/A	160'	N/A	HITL, CENTER & EDGE
TWY G1 *	N/A	N/A	N/A	N/A	N/A	N/A	N/A	N/A	N/A	N/A
TWY G2 *	N/A	N/A	N/A	N/A	N/A	N/A	N/A	N/A	N/A	N/A
TWY G3 *	N/A	N/A	N/A	N/A	N/A	N/A	N/A	N/A	N/A	N/A
TWY R *	N/A	N/A	N/A	N/A	N/A	N/A	N/A	N/A	N/A	N/A
TWY S *	N/A	N/A	N/A	N/A	N/A	N/A	N/A	N/A	N/A	N/A
TWY T *	N/A	N/A	N/A	N/A	N/A	N/A	N/A	N/A	N/A	N/A
PASSENGER (G-V) TL *	N/A	N/A	N/A	N/A	N/A	N/A	N/A	N/A	N/A	N/A
OVERNIGHT SOUTH (G-IV) TL *	N/A	N/A	N/A	N/A	N/A	N/A	N/A	N/A	N/A	N/A
OVERNIGHT WEST (G-III) TL *	N/A	N/A	N/A	N/A	N/A	N/A	N/A	N/A	N/A	N/A
ATLANTIC (G-II) TL	N/A	72-75'	N/A	N/A	171-214'	225-276'	N/A	57.5-138'	N/A	N/A
SIGNATURE (GIII) TL	N/A	70-90'	N/A	N/A	171-214'	225-276'	N/A	57.5-138'	113-499'	N/A
GENERAL AVIATION TL	N/A	90'	N/A	N/A	118-171'	162-225'	N/A	57.5-138'	146-259'	N/A

* = TO BE REMOVED
** = TO BE PARTIALLY REMOVED
(1) SEE EXISTING ALP FOR TAXIWAY A WIDTH (VARIES)

EXISTING TAXIWAY DATA

NAME	WIDTH: TAXIWAY	WIDTH: SHOULDER	WIDTH: TESM	WIDTH: TSA	WIDTH: OFA	OBJECTS INSIDE TSA AND TOFA	SEPARATION FROM TWY CL TO FIXED/MOVABLE OBJECT	TAXIWAY/TAXILANE LIGHTING (2)
TWY A (1)	75'	12'	15'	214'	320'	N/A	160'	HITL, CENTER & EDGE
TWY B	75'	12'	15'	214'	320'	N/A	160'	HITL, CENTER & EDGE
TWY C	75'	N/A	15'	214'	320'	N/A	160'	HITL, EDGE
TWY E	78'	12'	15'	214'	320'	N/A	160'	HITL, EDGE
TWY F	137'	12'	15'	214'	320'	N/A	160'	HITL, CENTER & EDGE
TWY G	75'	35'	15'	214'	320'	N/A	160'	HITL, CENTER & EDGE
TWY G1	143'	N/A	15'	214'	320'	N/A	160'	HITL, CENTER & EDGE
TWY G2	143'	N/A	15'	214'	320'	N/A	160'	HITL, CENTER & EDGE
TWY G3	143'	N/A	15'	214'	320'	N/A	160'	HITL, CENTER & EDGE
TWY H	75'	N/A	15'	214'	320'	N/A	160'	HITL, CENTER & EDGE
TWY J	142'	12'	15'	214'	320'	N/A	160'	HITL, CENTER & EDGE
TWY K	75'	12'	15'	214'	320'	N/A	160'	HITL, EDGE
TWY L	75'	12'	15'	214'	320'	N/A	160'	HITL, EDGE
TWY M	75'	12'	15'	214'	320'	N/A	160'	HITL, CENTER & EDGE
TWY N	75'	N/A	15'	214'	320'	N/A	160'	HITL, EDGE
TWY P	75'	30'	15'	214'	320'	N/A	160'	HITL, CENTER & EDGE
TWY R	75'-126'	N/A	15'	214'	320'	N/A	160'	HITL, EDGE
TWY S	79'	50'	15'	214'	320'	N/A	160'	HITL, EDGE
TWY T	75'	50'	15'	214'	320'	N/A	160'	HITL, EDGE
TWY V	75'	50'	15'	214'	320'	N/A	160'	HITL, EDGE
TWY W	75'	50'	15'	214'	320'	N/A	160'	HITL, EDGE
TWY Z	50'	25'	15'	214'	320'	N/A	160'	HITL, EDGE
PASSENGER (G-V) TL	72'	N/A	N/A	214'	320'	N/A	160'	N/A
OVERNIGHT EAST (G-III) TL	72'	N/A	N/A	214'	320'	Fence (89'-133')	160'	N/A
OVERNIGHT SOUTH (G-IV) TL	72'	N/A	N/A	214'	320'	N/A	160'	N/A
OVERNIGHT WEST (G-III) TL	72'	N/A	N/A	214'	320'	Fence (106'-119')	160'	N/A
ATLANTIC (G-II) TL	72-75'	N/A	N/A	171-214'	225-276'	N/A	57.5-138'	N/A
SIGNATURE (G-III) TL	70-90'	N/A	N/A	171-214'	225-276'	N/A	57.5-138'	N/A
GENERAL AVIATION TL	90'	N/A	N/A	118-171'	162-225'	N/A	57.5-138'	N/A

(1) SEE EXISTING ALP FOR TAXIWAY A WIDTH (VARIES)
(2) TAXIWAY A HAS PARTIAL LENGTH CENTERLINE LIGHTS (NOT ENERGIZED, CABLES NOT RUN, BUT HAVE CANS IN PAVEMENT).
PORTIONS OF TAXIWAYS MAY HAVE REDUCED TSA/TOFA DIMENSIONS

HELIPORT DATA

ITEM		H1 EXISTING	H1 FUTURE	H1 ULTIMATE	H2 EXISTING	H2 FUTURE	H2 ULTIMATE	H3 (MIL) EXISTING	H3 (MIL) FUTURE	H3 (MIL) ULTIMATE
DESIGN HELICOPTER		BELL 407	SAME	SAME	BELL 407	SAME	SAME	ENSTROM 280FX	SAME	SAME
HELIPAD SURFACE (MATERIAL-TYPE)		CONC-UG	SAME	SAME	CONC-UG	SAME	SAME	CONC-UG	SAME	SAME
PAVEMENT STRENGTH (X 1000 LBS)		75	SAME	SAME	75	SAME	SAME	75	SAME	SAME
EFFECTIVE GRADIENT (%)		0.0081	SAME	SAME	0.0114	SAME	SAME	0.0173	SAME	SAME
TLOF WIDTH		150'	SAME	SAME	150'	SAME	SAME	150'	SAME	SAME
HELIPAD ZONE ELEVATION		491.629'	SAME	SAME	479.646'	SAME	SAME	477.367'	SAME	SAME
HELIPAD COORDINATES	LATITUDE (N)	30° 11' 15.7"	SAME	SAME	30° 11' 7.7"	SAME	SAME	30° 10' 46.1"	SAME	SAME
	LONGITUDE (W)	97° 39' 39.8"	SAME	SAME	97° 39' 39.5"	SAME	SAME	97° 40' 23.5"	SAME	SAME
HELIPAD LIGHTING		NO	SAME	SAME	NO	SAME	SAME	YES	SAME	SAME
APPROACH/DEPARTURE SURFACE	LENGTH	4000'	SAME	SAME	4000'	SAME	SAME	1200'	SAME	SAME
	INNER WIDTH	62'	SAME	SAME	62'	SAME	SAME	150'	SAME	SAME
	OUTER WIDTH	500'	SAME	SAME	500'	SAME	SAME	500'	SAME	SAME
	SLOPE	NONE	SAME	SAME	NONE	SAME	SAME	8:1	SAME	SAME
TOUCHDOWN LIFT OFF (TLOF)	LENGTH	35'	SAME	SAME	35'	SAME	SAME	32'	SAME	SAME
	WIDTH	35'	SAME	SAME	35'	SAME	SAME	32'	SAME	SAME
FINAL APPROACH TAKE-OFF (FATO)	LENGTH	62'	SAME	SAME	62'	SAME	SAME	150'	SAME	SAME
	WIDTH	62'	SAME	SAME	62'	SAME	SAME	150'	SAME	SAME
HELIPAD SAFETY AREA (HSA)	LENGTH	102'	SAME	SAME	102'	SAME	SAME	400'	SAME	SAME
	WIDTH	102'	SAME	SAME	102'	SAME	SAME	150'	SAME	SAME
HELIPAD PROTECTION ZONE	LENGTH	280'	SAME	SAME	280'	SAME	SAME	800'	SAME	SAME
	INNER WIDTH	62'	SAME	SAME	61'	SAME	SAME	150'	SAME	SAME
	OUTER WIDTH	93'	SAME	SAME	136'	SAME	SAME	150'	SAME	SAME

ACRONYM TABLE

ACRONYM	DESCRIPTION	ACRONYM	DESCRIPTION
	FACILITIES DATA		RUNWAY DATA TABLE
ABIA	AUSTIN-BERGSTROM INTERNATIONAL AIRPORT	ASLF-2	HIGH INTENSITY APPROACH LIGHTING SYSTEM CATEGORY II CONFIGURATION WITH SEQUENCED FLASHERS
ARFF	AIRPORT RESCUE FIRE FIGHTING		
ATCT	AIR TRAFFIC CONTROL TOWER	DME	DISTANCE MEASURING EQUIPMENT
COA	CITY OF AUSTIN	GS	GLIDE SLOPE
DOA	DEPARTMENT OF AVIATION	HIRL	HIGH INTENSITY RUNWAY LIGHTING
FAA	FEDERAL AVIATION ADMINISTRATION	LOC	LOCALIZER
GA	GENERAL AVIATION	MALS	MEDIUM INTENSITY APPROACH LIGHTING SYSTEM
GSEM	GROUND SERVICE EQUIPMENT MAINTENANCE	MALSR	MEDIUM INTENSITY APPROACH LIGHTING SYSTEM WITH RUNWAY ALIGNMENT INDICATOR LIGHTS
O & M	OPERATIONS AND MAINTENANCE		
TRACON	TERMINAL RADAR APPROACH CONTROL FACILITY	OCS	OBSTACLE CLEARANCE SURFACES
	AIRPORT DATA TABLE	PAPI	PRECISION APPROACH PATH INDICATOR
ASR	AIRPORT SURVEILLANCE RADAR	RCL	RADIO COMMUNICATIONS LINK
MSL	MEAN SEA LEVEL	RCLS	RUNWAY CENTERLINE LIGHTING SYSTEM
NAD	NORTH AMERICAN DATUM	RVR	RUNWAY VISUAL RANGE
NDB	NON-DIRECTIONAL BEACON	TERPS	TERMINAL INSTRUMENT PROCEDURES
NPIAS	NATIONAL PLAN OF INTEGRATED AIRPORT SYSTEMS	TDZ	TOUCH DOWN ZONE
		VGS	VERTICAL GUIDANCE SURFACE
			TAXIWAY DATA TABLE
		CL	CENTERLINE
		HITL	HIGH INTENSITY TAXIWAY LIGHTING SYSTEM
		OFA	OBJECT FREE AREA
		TESM	TAXIWAY EDGE SAFETY MARGIN
		TL	TAXILANE
		TOFA	TAXIWAY OBJECT FREE AREA
	DECLARED DISTANCES TABLE	TSA	TAXIWAY/TAXILANE SAFETY AREA
ASDA	ACCELERATE STOP DISTANCE AVAILABLE. THE RUNWAY PLUS STOPWAY (SWY) LENGTH DECLARED AVAILABLE AND SUITABLE FOR THE ACCELERATION AND DECELERATION OF AN AIRPLANE ABORTING A TAKEOFF.	TWY	TAXIWAY
			GENERAL
		AOA PID	AIRCRAFT OPERATING AREA PASSIVE INTRUSION DETECTOR
LDA	LANDING DISTANCE AVAILABLE. THE RUNWAY LENGTH DECLARED AVAILABLE AND SUITABLE FOR A LANDING AIRPLANE.	ARP	AIRPORT REFERENCE POINT
		ASOS	AUTOMATED SURFACE OBSERVATION SYSTEM
TORA	TAKEOFF RUNWAY AVAILABLE. THE RUNWAY LENGTH DECLARED AVAILABLE AND SUITABLE FOR THE GROUND RUN OF AN AIRPLANE TAKING OFF.	BRL	BUILDING RESTRICTION LINE
		FBO	FIXED BASE OPERATOR
TODA	TAKEOFF DISTANCE AVAILABLE. THE TORA PLUS THE LENGTH OF ANY REMAINING RUNWAY AND/OR CLEARWAY (CWY) BEYOND THE FAR END OF THE TORA.	PARD	PARKS AND RECREATION DEPARTMENT
		RTR	REMOTE TRANSMITTER/RECEIVER

AIRPORT DATA

ITEM		EXISTING	FUTURE	ULTIMATE
AIRPORT REFERENCE CODE (ARC)		D-V	D-VI	D-VI
MEAN MAXIMUM TEMPERATURE		96° F	SAME	SAME
AIRPORT ELEVATION (MSL)		541.5'	SAME	SAME
AIRPORT NAVIGATIONAL AIDS		PAPI, ASR, ROTATING BEACON	PAPI, ASR, ROTATING BEACON	PAPI, ASR, ROTATING BEACON
OTHER NAVIGATIONAL AIDS		WIND CONE, MALSR, ALSF2, MALS, GS, LOC, PAPI, ASR, ROTATING BEACON, DME, NDB, ASOS, RVR	SAME	SAME
AIRPORT REFERENCE POINT (NAD 83)	LATITUDE (N)	30° 11' 40.30"	30° 11' 40.30"	30° 11' 44.06" (1)
	LONGITUDE (W)	97° 40' 11.56"	97° 40' 11.56"	97° 40' 15.05" (1)
CRITICAL DESIGN AIRCRAFT		BOEING 747	BOEING 787-900	BOEING 787-900
AIRPORT MAGNETIC VARIATION	DECLINATION	3° 44' E	N/A	N/A
	ANNUAL RATE OF CHANGE	0° 7' W	N/A	N/A
	DATE	SEPTEMBER, 2018	N/A	N/A
	SOURCE	NATIONAL GEOPHYSICAL DATA CENTER NOAA BOULDER, CO	N/A	N/A
NPIAS SERVICE LEVEL		P WITH A MEDIUM HUB	P WITH A LARGE HUB	P WITH A LARGE HUB
STATE SERVICE LEVEL		COMMERICAL SERVICE	SAME	SAME
OWNER		CITY OF AUSTIN DEPARMENT OF AVIATION	SAME	SAME

(1) ULTIMATE AIRPORT REFERENCE POINT WAS CALCULATED PER FAA AC 150/5300-13A, APPENDIX 3.

DECLARED DISTANCE

ITEM	17R EXISTING	17R FUTURE	17R ULTIMATE	35L EXISTING	35L FUTURE	35L ULTIMATE	17C EXISTING	17C FUTURE	17C ULTIMATE	35C EXISTING	35C FUTURE	35C ULTIMATE	17L EXISTING	17L FUTURE	17L ULTIMATE	35R EXISTING	35R FUTURE	35R ULTIMATE
TAKEOFF RUN AVAILABLE (TORA)	12,250	SAME	SAME	12,250	SAME	SAME	N/A	N/A	10,000	N/A	N/A	10,000	9,000	SAME	SAME	9,000	SAME	SAME
TAKEOFF DISTANCE AVAILABLE (TODA)	12,250	SAME	SAME	12,250	SAME	SAME	N/A	N/A	10,000	N/A	N/A	10,000	9,000	SAME	SAME	9,000	SAME	SAME
ACCELERATE STOP DISTANCE AVAILABLE (ASDA)	12,250	SAME	SAME	12,250	SAME	SAME	N/A	N/A	10,000	N/A	N/A	10,000	9,000	SAME	SAME	9,000	SAME	SAME
LANDING DISTANCE AVAILABLE (LDA)	12,250	SAME	SAME	12,250	SAME	SAME	N/A	N/A	10,000	N/A	N/A	10,000	9,000	SAME	SAME	9,000	SAME	SAME

RUNWAY DATA

ITEM		17L EXISTING	17L FUTURE	17L ULTIMATE	35R EXISTING	35R FUTURE	35R ULTIMATE	17C EXISTING	17C FUTURE	17C ULTIMATE	35C EXISTING	35C FUTURE	35C ULTIMATE	17R EXISTING	17R FUTURE	17R ULTIMATE	35L EXISTING	35L FUTURE	35L ULTIMATE
RUNWAY DESIGN CODE (RDC)		D-V-1200	SAME	SAME	D-V-1600	SAME	SAME	NA	NA	D-VI-1200	NA	NA	D-VI-2400	D-V-4000	D-V-1200	SAME	D-V-2400	D-V-2400	SAME
APPROACH REFERENCE CODE (APRC)		D/IV/1200 D/V/1200	SAME	SAME	D/IV/1600 D/V/1600	SAME	SAME	NA	NA	D-V-1200	NA	NA	D-V-2400	D/IV/4000 D/V/4000	D-V-1200	D-VI-2400	D/IV/2400 D/V/2400	D-VI-2400	D-VI-2400
DEPARTURE REFERENCE CODE (DPRC)		D-V	SAME	SAME	D-V	SAME	SAME	NA	NA	D-VI	NA	NA	D-VI	D-VI	D-VI	D-VI	D-VI	D-VI	D-VI
RUNWAY SURFACE		CONCRETE	SAME	SAME	CONCRETE	SAME	SAME	NA	NA	CONCRETE	NA	NA	CONCRETE	CONCRETE	SAME	SAME	CONCRETE	SAME	SAME
PAVEMENT STRENGTH BY WHEEL LOADING (X 1000 LBS)		75(s), 210 (d), 618(dt)	SAME	SAME	75(s), 210 (d), 618(dt)	SAME	SAME	NA	NA	75(s), 210 (d), 618(dt)	NA	NA	75(s), 210 (d), 618(dt)	75(s), 210(d), 618(dt)	SAME	SAME	75(s), 210(d), 618(dt)	SAME	SAME
RUNWAY PAVEMENT STRENGTH BY PCN		92/R/B/W/T	SAME	SAME	92/R/B/W/T	SAME	SAME	NA	NA	92/R/B/W/T	NA	NA	92/R/B/W/T	98/R/B/W/T	SAME	SAME	98/R/B/W/T	SAME	SAME
RUNWAY SURFACE TREATMENT		GROOVED	SAME	SAME	GROOVED	SAME	SAME	NA	NA	GROOVED	NA	NA	GROOVED	GROOVED	SAME	SAME	GROOVED	SAME	SAME
EFFECTIVE GRADIENT (%)		0.2	SAME	SAME	0.2	SAME	SAME	NA	NA	0.4	NA	NA	0.4	0.4	SAME	SAME	0.4	SAME	SAME
PERCENT WIND COVERAGE	10.5 KNOTS	80.78%	SAME	SAME	65.42%	SAME	SAME	NA	NA	80.78%	NA	NA	65.42%	80.78%	SAME	SAME	65.42%	SAME	SAME
	13 KNOTS	81.31%	SAME	SAME	65.93%	SAME	SAME	NA	NA	81.31%	NA	NA	65.93%	81.31%	SAME	SAME	65.93%	SAME	SAME
	16 KNOTS	81.43%	SAME	SAME	66.10%	SAME	SAME	NA	NA	81.43%	NA	NA	66.10%	81.43%	SAME	SAME	66.10%	SAME	SAME
	20 KNOTS	81.46%	SAME	SAME	66.15%	SAME	SAME	NA	NA	81.46%	NA	NA	66.15%	81.46%	SAME	SAME	66.15%	SAME	SAME
RUNWAY BEARING (TRUE)		178.69	SAME	SAME	358.69	SAME	SAME	NA	NA	178.41"	NA	NA	358.41"	178.41"	SAME	SAME	358.41"	SAME	SAME
RUNWAY LENGTH		9,000'	SAME	SAME	9,000'	SAME	SAME	NA	NA	10,000'	NA	NA	10,000'	12,250'	SAME	SAME	12,250'	SAME	SAME
RUNWAY WIDTH		150'	SAME	SAME	150'	SAME	SAME	NA	NA	200'	NA	NA	200'	150'	SAME	SAME	150'	SAME	SAME
RUNWAY BLAST PAD (LENGTH/WIDTH)		400'/175'	SAME	SAME	400'/175'	SAME	SAME	NA	NA	400'/200'	NA	NA	400'/200'	1000'/300'	SAME	SAME	1000'/300'	SAME	SAME
TOUCH DOWN ZONE ELEVATION		491.6'	SAME	SAME	479.7'	SAME	SAME	NA	NA	532.0'	NA	NA	504.0'	541.5'	SAME	SAME	495.6'	SAME	SAME
RUNWAY END ELEVATION		491.6'	SAME	SAME	473.6'	SAME	SAME	NA	NA	532.0'	NA	NA	492.0'	541.5'	SAME	SAME	487.3'	SAME	SAME
RUNWAY END COORDINATES LAT/ LON (NAD83)	LATITUDE (N) LONGITUDE (W)	30° 12' 13.7882" 97° 39' 28.4078"	SAME	SAME	30° 10' 44.7277" 97° 39' 26.0760"	SAME	SAME	NA	NA	30° 12' 44.3686" 97° 40' 31.9102"	NA	NA	30° 11' 05.4097" 97° 40' 29.2982"	30° 12' 49.0181" 97° 40' 45.7132"	SAME	SAME	30° 10' 47.7956" 97° 40' 42.5089"	SAME	SAME
TEXAS STATE PLANE (4203 CENTRAL U.S. SURVEY FT)	EASTING (X) NORTHING (Y)	3141672.7366 10048032.3381	SAME	SAME	3142093.7186 10039042.4752	SAME	SAME	NA	NA	3136028.2051 10050987.2896	NA	NA	3136496.2243 10040998.2478	3134806.2401 10051427.9610	SAME	SAME	3135379.5546 10039191.5906	SAME	SAME
RUNWAY APPROACH SLOPE ANGLE (PART 77 INNER)		50:1	SAME	SAME	50:1	SAME	SAME	NA	NA	50:1	NA	NA	50:1	50:1	SAME	SAME	50:1	SAME	SAME
RUNWAY APPROACH TYPES		PRECISION	SAME	SAME	PRECISION	SAME	SAME	NA	NA	PRECISION	NA	NA	PRECISION	PRECISION	SAME	SAME	PRECISION	SAME	SAME
RUNWAY LIGHTING		TDZ, HIRL, RCLS	SAME	SAME	TDZ, HIRL, RCLS	SAME	SAME	NA	NA	TDZ, HIRL, RCLS	NA	NA	TDZ, HIRL, RCLS	HIRL	TDZ, HIRL, RCLS	TDZ, HIRL, RCLS	HIRL	TDZ, HIRL, RCLS	TDZ, HIRL, RCLS
RUNWAY MARKING		PRECISION	SAME	SAME	PRECISION	SAME	SAME	NA	NA	PRECISION	NA	NA	PRECISION	PRECISION	SAME	SAME	PRECISION	SAME	SAME
NAVIGATIONAL AIDS		ALSF-2, PAPI, RVR, LOC, DME, GS	SAME	SAME	MALSR, PAPI, RVR, LOC, DME, GS	ALSF-2, PAPI, RVR, LOC, DME, GS	SAME	NA	NA	ALSF-2, PAPI, MID & END RVR, LOC,DME, GS	NA	NA	ALSF-2, PAPI, MID & END RVR, LOC,DME, GS	MALS, PAPI, RVR, DME LOC, GS	ALSF-2, PAPI, MID & END RVR, LOC, GS	SAME	MALSR, PAPI, RVR, DME, LOC, GS	ALSF-2, PAPI, MID & END RVR, DME, LOC, GS	SAME
PART 77 APPROACH TYPE		PRECISION	SAME	SAME	PRECISION	SAME	SAME	NA	NA	PRECISION	NA	NA	PRECISION	PRECISION	SAME	SAME	PRECISION	SAME	SAME
PART 77 APPROACH CATEGORY		50:1	SAME	SAME	50:1	SAME	SAME	NA	NA	50:1	NA	NA	50:1	50:1	SAME	SAME	50:1	SAME	SAME
VISIBILITY MINIMUMS (RVR) IN HUNDREDS OF FEET		6	SAME	SAME	14	SAME	SAME	NA	NA	6	NA	NA	6	40	SAME	SAME	24	SAME	SAME
AERONAUTICAL SURVEY REQUIRED FOR APPROACH		VGS	SAME	SAME	VGS	SAME	SAME	NA	NA	VGS	NA	NA	VGS	VGS	SAME	SAME	VGS	SAME	SAME
TERPS DEPARTURE SURFACE/OCS		40:1	SAME	SAME	40:1	SAME	SAME	NA	NA	40:1	NA	NA	40:1	40:1	SAME	SAME	40:1	SAME	SAME
THRESHOLD SITING SURFACE (34:1 SLOPE)	LENGTH	10,000'	SAME	SAME	10,000'	SAME	SAME	NA	NA	10,000'	NA	NA	10,000'	10,000'	SAME	SAME	10,000'	SAME	SAME
	WIDTH (W1)	800'	SAME	SAME	800'	SAME	SAME	NA	NA	800'	NA	NA	800'	800'	SAME	SAME	800'	SAME	SAME
	WIDTH (W2)	3,800'	SAME	SAME	3,800'	SAME	SAME	NA	NA	3,800'	NA	NA	3,800'	3,800'	SAME	SAME	3,800'	SAME	SAME
RUNWAY SAFETY AREA (RSA)	LENGTH (BEYOND RUNWAY END)	1,000'	SAME	SAME	1,000'	SAME	SAME	NA	NA	1,000'	NA	NA	1,000'	1,000'	SAME	SAME	1,000'	SAME	SAME
	WIDTH	500'	SAME	SAME	500'	SAME	SAME	NA	NA	500'	NA	NA	500'	500'	SAME	SAME	500'	SAME	SAME
RUNWAY PROTECTION ZONE (RPZ)	LENGTH (L)	2,500'	SAME	SAME	2,500'	SAME	SAME	NA	NA	2,500'	NA	NA	2,500'	2,500'	SAME	SAME	2,500'	SAME	SAME
	INNER WIDTH (W1)	1,000'	SAME	SAME	1,000'	SAME	SAME	NA	NA	1,000'	NA	NA	1,000'	1,000'	SAME	SAME	1,000'	SAME	SAME
	OUTER WIDTH (W2)	1,750'	SAME	SAME	1,750'	SAME	SAME	NA	NA	1,750'	NA	NA	1,750'	1,750'	SAME	SAME	1,750'	SAME	SAME
RUNWAY OBJECT FREE AREA (ROFA)	LENGTH (BEYOND RUNWAY END)	1,000'	SAME	SAME	1,000'	SAME	SAME	NA	NA	1,000'	NA	NA	1,000'	1,000'	SAME	SAME	1,000'	SAME	SAME
	WIDTH	800'	SAME	SAME	800'	SAME	SAME	NA	NA	800'	NA	NA	800'	800'	SAME	SAME	800'	SAME	SAME
RUNWAY OBSTACLE FREE ZONE (ROFZ)	LENGTH	9,400'	SAME	SAME	9,400'	SAME	SAME	NA	NA	10,400'	NA	NA	10,400'	12,650'	SAME	SAME	12,650'	SAME	SAME
	WIDTH	400'	SAME	SAME	400'	SAME	SAME	NA	NA	400'	NA	NA	400'	400'	SAME	SAME	400'	SAME	SAME
PRECISON OBSTACLE FREE ZONE (POFZ)	LENGTH (G) 1	200'	SAME	SAME	200'	SAME	SAME	NA	NA	200'	NA	NA	200'	200'	SAME	SAME	200'	SAME	SAME
	WIDTH (D)	800'	SAME	SAME	800'	SAME	SAME	NA	NA	800'	NA	NA	800'	800'	SAME	SAME	800'	SAME	SAME
INNER-APPROACH OBSTACLE FREE ZONE (50:1)	LENGTH (G) 2	2,400'	SAME	SAME	2,400'	SAME	SAME	NA	NA	2,400'	NA	NA	2,400'	1,400'	SAME	SAME	2,400'	SAME	SAME
	WIDTH (D)	400'	SAME	SAME	400'	SAME	SAME	NA	NA	400'	NA	NA	400'	400'	SAME	SAME	400'	400'	400'
INNER-TRANSITIONAL OBSTACLE FREE ZONE (ITOFZ)	HORIZ.SURFACE ELEV.	691.5'	SAME	SAME	691.5'	691.5'	SAME	NA	NA	691.5'	NA	NA	691.5'	691.5'	691.5'	SAME	691.5'	691.5'	SAME
	(H)	24.10'	SAME	SAME	39.46'	24.14'	SAME	NA	NA	24.01'	NA	NA	24.10'	34.75'	23.99'	SAME	34.91'	24.11'	SAME
	(Y)	659.32'	SAME	SAME	NA	659.75'	SAME	NA	NA	658.35'	NA	NA	659.31'	NA	658.12'	SAME	NA	659.42'	SAME

FAA DISCLAIMER:
1. THE PREPARATION OF THIS DOCUMENT MAY HAVE BEEN SUPPORTED, IN PART, THROUGH A PLANNING GRANT FROM THE FEDERAL AVIATION ADMINISTRATION AS PROVIDED UNDER SECTION 505 OF THE AIRPORT AND AIRWAY IMPROVEMENT ACT OF 1982. THE CONTENTS DO NOT NECESSARILY REFLECT THE OFFICIAL VIEWS OR POLICY OF THE FAA. ACCEPTANCE OF THIS REPORT BY THE FAA DOES NOT IN ANY WAY CONSTITUTE A COMMITMENT ON THE PART OF THE UNITED STATES TO PARTICIPATE IN ANY DEVELOPMENT DEPICTED THEREIN, NOR DOES IT INDICATE THAT THE PROPOSED DEVELOPMENT IS ENVIRONMENTALLY ACCEPTABLE WITH APPROPRIATE PUBLIC LAWS.
2. THE FAA'S APPROVAL OF THIS AIRPORT LAYOUT PLAN (ALP) REPRESENTS ACCEPTANCE OF THE GENERAL LOCATION OF FUTURE FACILITIES DEPICTED. DURING THE PRELIMINARY DESIGN PHASE, THE AIRPORT OWNER SHALL SUBMIT, FOR FAA APPROVAL: FINAL LOCATIONS, HEIGHTS, AND EXTERIOR FINISH OF ALL STRUCTURES. THE FAA'S CONCERNS ARE OBSTRUCTIONS, IMPACT ON ELECTRONIC FACILITIES, AND ADVERSE IMPACT ON CONTROLLER VIEW OF AIRCRAFT APPROACHES AND GROUND MOVEMENT AREAS WHICH COULD ADVERSELY AFFECT THE SAFETY, EFFICIENCY, OR UTILITY OF THE AIRPORT.

GARVER

NOTES:
1. USED NAD 83 STATE PLANE COORDINATE SYSTEM
2. NAVD88 VERTICAL CONTROL DATUM USED FOR ELEVATION.
3. WAIVER OF DESIGN STANDARDS FOR PAVED OVERRUN AREA OF RUNWAY 17R ISSUED JUNE 15, 1995.
4. AIRPORT ELEVATION: 541.5' NAVD88 (MSL)

DRAFT

APPROVAL
AUSTIN-BERGSTROM INTERNATIONAL AIRPORT
CITY OF AUSTIN AVIATION DEPARTMENT

JENNIFER WILLIAMS, PROJECT MANAGER DATE

FAA ASW-ADO APPROVAL BLOCK:
FEDERAL AVIATION ADMINISTRATION
FORT WORTH AIRPORTS DISTRICT OFFICE
CONDITIONALLY APPROVED: ____________
MANAGER, ASW-ADO
DATE: ____________
SUBJECT TO COMMENTS IN LETTER DATED: ____________
AIRSPACE STUDY NUMBER: ____________

NO.	DATE	ISSUE	BY

JOB NO.:
DRAWN BY: CS
CHECKED BY: TSP
COORD. CHECK:
FILE NAME: M3343-C-AD-01.dwg
DATE: JANUARY 21, 2019
SCALE: N.T.S

2

Austin-Bergstrom International Airport

AIRPORT DATA SHEET